Front view and mounting

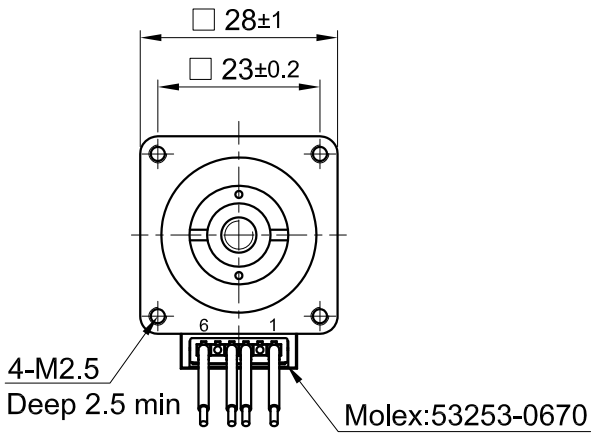

Side view

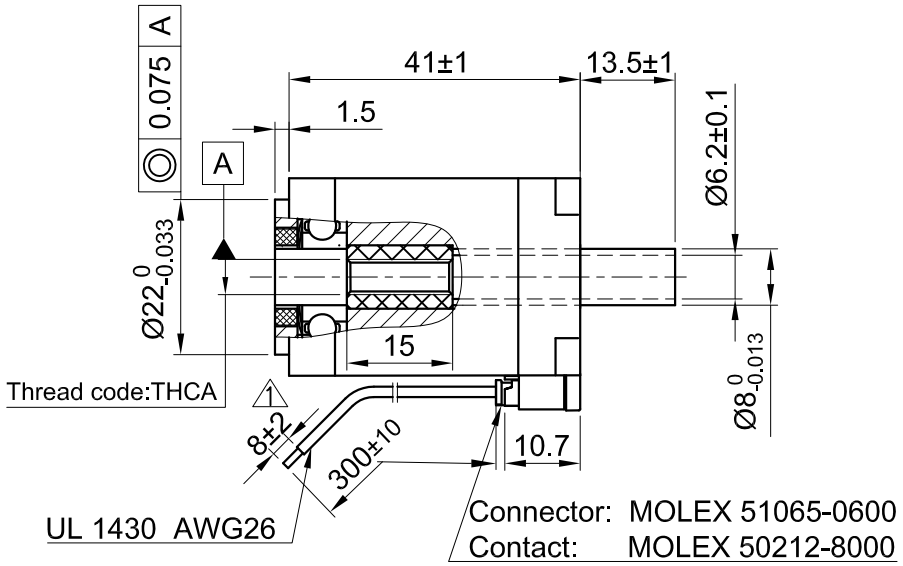

Rear view

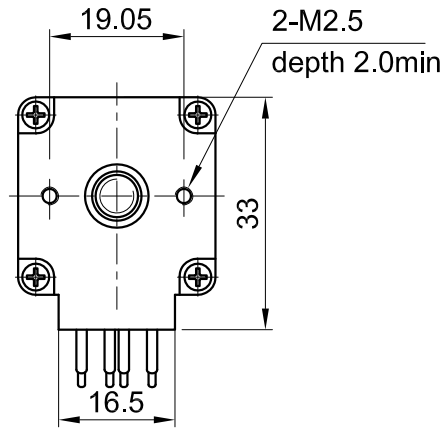

SPECIFICATION \ CONNECTION	BIPOLAR
AMPS/PHASE	1.5
RESISTANCE/PHASE (Ohms)@25°C	1.45±15%
INDUCTANCE/PHASE (mH) @1KHz	1.25±20%
THREAD DIAMETER (mm) [in] 1	5 [0.197]
THREAD LEAD(mm) [in] 1	2 [0.079]
THRUST (N) [lbf]	152[34.2]
RESOLUTION (mm/STEP)	0.01
MAX. SPEED (mm/sec.) AT 24V 1	35
WEIGHT (Kg) [lb]	0.14[0.31]

TEMPERATURE RISE: MAX.80°C (MOTOR STANDSTILL; FOR 2 PHASE ENERGIZED)
AMBIENT TEMPERATURE −10°~ 50°C [14°F ~ 122°F]
INSULATION RESISTANCE 100 MOhm (UNDER NORMAL TEMPERATURE AND HUMIDITY)
INSULATION CLASS B 130° [266°F]
DIELECTRIC STRENGTH 500VAC FOR 1 MIN. (BETWEEN THE MOTOR COILS AND THE MOTOR CASE)
AMBIENT HUMIDITY MAX. 85% (NO CONDENSATION)

Please regard the application note at www.nanotec.com for further informations.

2

TYPE OF CONNECTION (EXTERN)	MOTOR		
BIPOLAR	CONNECTOR PIN NO.	LEADS	WINDING
A —	1	BK	A
A\ —	3	GN	A\
B —	4	RD	B
B\ —	6	BU	B\

1

FULL STEP 2 PHASE–Ex.,
WHEN FACING MOUNTING END (X)

STEP	A	B	A\	B\		CCW
1	+	+	−	−	↓	↑
2	−	+	+	−		
3	−	−	+	+		
4	+	−	−	+	CW	

WIRING DIAGRAM

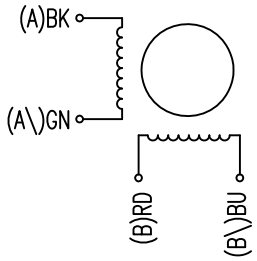

REV	DESCRIPTION	DATE	DRN
2	Remove shaft play adjustable	11.03.19	X T
1	–	11.12.18	X T
D	–	26.02.18	L W

Nanotec® PLUG & DRIVE

Surface specification DIN ISO 1302 | General tolerances DIN ISO 2768-CH | Work piece edge DIN ISO 13715

APVD	J.S.	16.02.17
CHKD	GYQ	16.02.17
DRN	B.L.	16.02.17
SIGNATURE		DATE

LINEAR ACTUATOR

DWG.NO LA281M15–B–THCA